PENTAIR

FUSE HARNESS ASSEMBLY KIT

FOR INTELLIBRITE® 5G 12 V POOL LIGHT

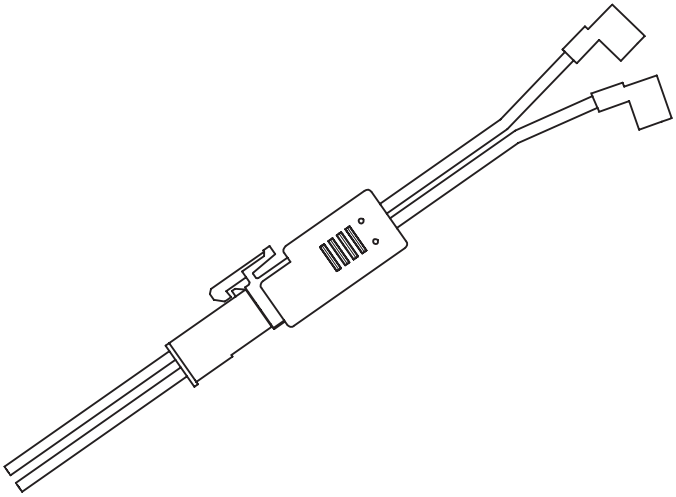

INSTALLATION
GUIDE

IMPORTANT SAFETY INSTRUCTIONS
READ AND FOLLOW ALL INSTRUCTIONS
SAVE THESE INSTRUCTIONS

Technical Support: Phone: **(800) 831-7133 -** Fax: **(800) 284-4151**

Web sites: www.pentairpool.com and www.staritepool.com:

Contents

IMPORTANT WARNING AND SAFETY INSTRUCTIONS.....i

IntelliBrite Underwater White Pool and Spa Light 1

Replacing the IntelliBrite White Pool and Spa Light Assembly (in an existing pool) 2

Troubleshooting 2

Installing the IntelliBrite White Pool and Spa Light Fix..... 6

Wide and Narrow Angle Lens Adjustment..... 8

IntelliBrite White Pool Light Replacement Kit Part Numbers 9

Before Installing luminaries read the following:

⚠WARNING Always install a new lens gasket (see part on page 9), when ever reassembling the light. Failure to do so may permit water to leak into the assembly which could cause; (a) an electrical hazard resulting in death or serious injury to pool users, installer, or others due to electrical shock, or (b) breakage of the lamp or lens, which likewise could result in serious injury to pool user, installers, or bystanders, or in damage to property.

FOR 12 VAC LUMINARIES: ALWAYS USE A SEPARATE STEP DOWN TRANSFORMER TO POWER LUMINARIES. SEE DIAGRAM ON PAGE 23.
Note: Connect all three (or two) wires to the corresponding circuit wires in the Junction Box (black wire to power, white wire to common, and green wire to ground). 12 VAC LUMINARIES SPECIFICATION: 12 VAC, 50/60 Hz
REPLACE ANY CRACKED PROTECTIVE SHIELD (CRACKED LENS) WITH NEWLENSAND GASKET.

⚠CAUTION THE INTELLIBRITE 5G LED POOL LIGHT AND SPA LIGHT *CANNOT BE USED* ON A DIMMER CIRCUIT. USING A DIMMER SWITCH WILL RESULT IN PERMANENT DAMAGE TO THE LIGHT.

IMPORTANT WARNING AND SAFETY INSTRUCTIONS

DANGER **SERIOUS BODILY INJURY OR DEATH CAN RESULT IF THIS LIGHT IS NOT INSTALLED AND USED CORRECTLY.**

DANGER **INSTALLERS, POOL OPERATORS AND POOL OWNERS MUST READ THESE WARNINGS AND ALL INSTRUCTIONS BEFORE USING THE POOL AND/OR SPA LIGHT.**

WARNING Most states and local codes regulate the construction, installation, and operation of public pools and spas, and the construction of residential pools and spas. It is important to comply with these codes, many of which directly regulate the installation and use of this product. Consult your local building and health codes for more information.

IMPORTANT NOTICE - Attention Installer: This Installation and User's Guide ("Guide") contains important information about the installation, operation and safe use of this underwater pool and spa light. This Guide should be given to the owner and/or operator of this equipment.

WARNING Before installing this product, read and follow all warning notices and instructions in this Guide. Failure to follow warnings and instructions can result in severe injury, death, or property damage.
Call (800) 831-7133 for additional free copies of these instructions. Please refer to www.pentairpool.com for more information related to this products.

DANGER

RISK OF ELECTRICAL SHOCK OR ELECTROCUTION:
THE INTELLIBRITE® POOL AND SPA LIGHT REQUIRE HIGH VOLTAGE WHICH CAN SHOCK, BURN, OR CAUSE DEATH.
BEFORE WORKING ON POOL AND SPA LIGHTS a**lways disconnect power to the pool and/or spa lights at the circuit breaker from the light before servicing the light. Failure to do so could result in death or serious injury to service person, pool users or others due to electric shock.**

This underwater light must be installed by a licensed or certified electrician or a qualified pool professional in accordance with the current National Electrical Code (NEC), NFPA 70 or the Canadian Electrical Code (CEC), CSA C22.1. All applicable local installation codes and ordinances must also be adhered to. Improper installation will create an electrical hazard which could result in death or serious injury to pool users, installers or others due to electrical shock, and may also cause damage to property. Always disconnect the power to the pool light at the circuit breaker before servicing the light. Failure to do so could result in death or serious injury to serviceman, pool users or others due to electrical shock.

WARNING **Important Safety Information for Pentair Aquatic Systems Niche and Light Installation**

- All Niche and Light installations must conform with all codes. If local codes mandate a cord seal, use Pentair Aquatic Systems plastic niches (P/N 79206600 and P/N 79206700) and Cord Seal Kit (P/N 670044).
- Under **no circumstances** replace lights by splicing wire under water or behind niche.

READ AND FOLLOW ALL INSTRUCTIONS IN THIS MANUAL.

IMPORTANT WARNING AND SAFETY INSTRUCTIONS

⚠WARNING **RISK OF ELECTRIC SHOCK AND INJURY. USE ONLY THE INSTALLATION METHOD SPECIFIED BELOW.**

Location of Luminaire Use	Pentair Water Pool and Spa Fountain Fixture* (P/N 560001 and P/N 560000)	Required Installation Method
Swimming Pool and Spa	Wet-Niche Swimming Pool (or Spa) Luminaire (Light)	Fixture Housing (Forming Shell) ONLY. DO NOT USE Fountain Fixture Stand.
Fountain	Wet-Niche Submersible Luminaire (Light) swimming Pool (or Spa) Luminair (Light)	Fixture Housing (Forming Shell) or Fountain Fixture Stand

(*) Note: Wet-niche luminaires complying with requirements for both uses may bare both the Listed Wet-Niche Submersible Luminaires UL Mark. A luminaire not bearing the corresponding UL Listing Mark is not considered by UL to have been produced under UL's Listing and Follow-Up Service for the associated usage location.

CAUTION - The IntelliBrite® 5G Light fixture must only be used with Pentair Water Pool and Spa fixture housings (niches). **NOTICE: The external flexible cable or cord of this luminaire cannot be replaced; if the cord is damaged, the luminaire shall be destroyed.** If the IntelliBrite 5G light fixture is installed into other niches, the installation will not carry U.L. approval and will void all warranties.

⚠WARNING **For countries in compliance with International Electromechnical Commission (IEC) regulatory standards:** The light fixture must be installed by a licensed or certified electrician or a qualified pool service person, in accordance with IEC 364-7-702 and all applicable local codes and ordinance. Improper installation will create an electrical hazard, which could result in death or serious injury to pool user, installer or other due to electrical shock and may also cause damage to the property.

⚠WARNING Salt is an inherently corrosive material. While the levels of salt required for proper operation of an electronic chlorine generator are relatively low when compared to sea water and other salt solutions, placing any amount of salt in your pool increases the likelihood of corrosion or other deterioration of pool equipment and any surfaces used in and around your pool. Metal parts and certain natural and man-made surfaces are particularly susceptible to corrosion and deterioration when used in and around salt water pools. Pentair does not represent or otherwise guarantee that the proper use of an electronic chlorine generator will prevent corrosion or other deterioration of pool equipment and any surfaces used in and around your pool. Consult your experienced pool professional, who should be able to advise you on the proper material selection, installation techniques for those materials, and the proper use, care and maintenance of those materials for your specific pool type and location in order to minimize the corrosion and deterioration that is inherent in and around salt water pools.

POOL AND SPA FIXED LUMINARIES: Follow these guidelines when installing, replacing or reparing Pentair Aquatic Systems Pool and Spa fixed luminaries:

- REPLACE ANY CRACKED PROTECTIVE SHIELD (CRACKED LENS) WITH NEW LENS AND GASKET. FOR MORE INFORMATION SEE PAGE 11.

- FOR LIGHT OPERATION, ONLY USE A SAFETY ISOLATION TRANSFORMER.

CAUTION! Luminaires not suitable for direct mounting on normally flammable surfaces (suitable ONLY for mounting on non-combustible surfaces.

Surface Mount

Fixed pool and spa luminaries specification:

12 VAC 50/60 Hz - 120VAC ~ ,50/60 Hz.

Replacing the IntelliBrite® 5g Pool and Spa Light and Fuse Assemblies (in an existing pool or spa)

Risk of Electrical Shock or Electrocution!
This underwater light must be installed by a licensed or certified electrician or a qualified pool professional in accordance with the National Electrical Code and all applicable local codes and ordinances. Improper installation will create an electrical hazard which could result in death or serious injury to pool users, installers or others due to electrical shock, and may also cause damage to property.

Always disconnect the power to the pool light at the circuit breaker before servicing the light. Failure to do so could result in death or serious injury to serviceman, pool users or others due to electrical shock.

Verify that the pool and spa meets the requirements of the current National Electrical Code and all local codes and ordinances. A licensed or certified electrician must install the electrical system to meet or exceed those requirements before the underwater light is installed. Some of the requirements of the National Electrical Code which the pool's electrical system must meet are as follows:

- The lighting circuit has a Ground Fault Circuit Interrupter (GFCI) for line voltage models, and has an appropriately rated circuit breaker.
- The Junction Box (or, for **12 volt models**, the low voltage transformer) is located at least eight (8) inches (20.3 cm) above ground level and at least 48 inches (1.219 m) from the edge of the pool.
- The light fixture and all metal items within five (5) feet (1.524 m) of the pool are properly electrically bonded.
- The wet niche is properly installed so that the top edge of the underwater light's lens is at least 18 inches below the surface of the water in the pool.
- The wet niche is properly electrically bonded and grounded via the No. 8 AWG ground connector located at the rear of the niche.

IntelliBrite® 5g Pool Light (12V) Fuse Harness Replacement Overview

This manual describes how to replace the light fuse assembly and the light main circuit board for the IntelliBrite 5G pool light.

IMPORTANT! Before replacing the fuse assembly note the following:

Troubleshooting

Problem	Cause/Action
Light does not function properly.	Check the light wiring connection to the junction box at the pool side and to the AC power switch. Be sure that there is proper AC power applied to the light.
The light will not illuminate.	Check the GFCI ground fault wiring and reset if necessary. Replace FUSE assembly: **Note: Replacing the fuse assembly may or may not resolve this problem. In some instances the fuse assembly will blow and after replacing the fuse the light's circuit board is still not functional. In this case, the circuit board must be replaced.**

REPLACING THE INTELLIBRITE® 5G POOL LIGHT FUSE ASSEMBLY (IN AN EXISTING POOL)

When replacing or reassembling the IntelliBrite 5G Pool light, the Gasket (P/N 79101601) or Gasket and Lens (619864Z) MUST ALSO BE REPLACED - SEE PAGE 9 FOR PART NUMBERS

Removal and Installation of IntelliBrite 5G Pool Light Circuit Board

DANGER

D A N G E R !

RISK OF ELECTRICAL SHOCK OR ELECTROCUTION

Always disconnect power to the pool light at the circuit breaker before servicing the light. Failure to do so could result in death or serious injury to installer, service person, pool users, or others due to electrical shock.

1. **Turn off main electrical switch or circuit breaker**, as well as the switch which operates the IntelliBrite 5G light.
2. Before starting be sure you have a new lens and gasket and a fuse assembly (P/N 620276) ready to install (see page 9).

WARNING Always install a new lens gasket (P/N 79101601) whenever disassembling the IntelliBrite light assembly. Failure to do so may permit water to leak into the assembly which could cause:
(a) an electrical hazard resulting in death or serious injury to pool users, installers, or others due to electrical shock, or
(b) breakage of the lens, which likewise could result in serious injury to pool users, installers, or bystanders, or in damage to property.

3. **REMOVING THE INTELLIBRITE 5G POOL LIGHT ASSEMBLY:** Remove the pilot screw at top of face ring, remove the light assembly from the niche. Place the assembly on the deck. **Note:** It is not necessary to drain down the pool.
4. Unwind the cord from the base of the light housing.

Pilot screw (bronze)

IntelliBrite 5g Pool Light

WARNING Be sure to keep the IntelliBrite light pilot screw for re-installation. This screw mounts and electrically grounds the housing securely to the mounting ring and wet niche. Failure to use the screw provided could create an electrical hazard which could result in death or serious injury to pool users, installers or others due to electrical shock.

REPLACING THE INTELLIBRITE® WHITE POOL LIGHT FUSE HARNESS ASSEMBLY (IN AN EXISTING POOL) (Continued)

5. Place a cloth on the ground to protect the lens. Turn the light over so the lens is resting on the cloth. Using a ¼" nut driver and a #3 Phillips screwdriver, remove the nut uni-tension wire clamp. Place the nut aside for reinstallation.

6. Remove the face ring and wire clamp from the light housing.

7. With the light resting on its base, carefully pry off the gasket to remove the lens. Set the lens aside for installation later. Discard the gasket.

Note: A NEW LENS GASKET (P/N 79101601) MUST BE USED EACH TIME THE LIGHT IS REASSEMBLED. See page 9 for Replacement Kit part numbers.

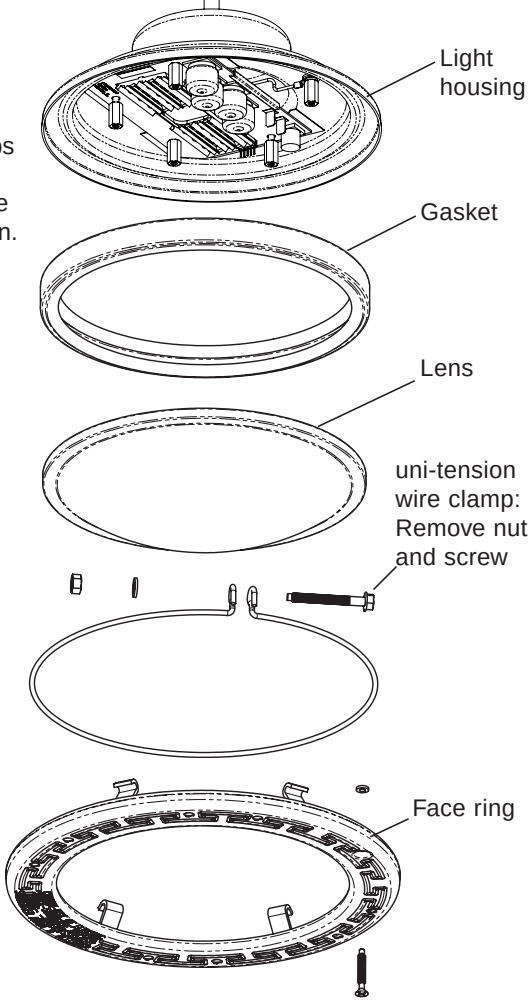

Note: Note the current position of the lens at the pilot screw (12 o'clock) position, before removing it from the fixture. "W" on the lens indicates wide angle, "N" indicates narrow angle. For more information, see page 8.

Continue on next page.

REPLACING THE INTELLIBRITE® WHITE POOL LIGHT FUSE HARNESS ASSEMBLY (IN AN EXISTING POOL) (Continued)

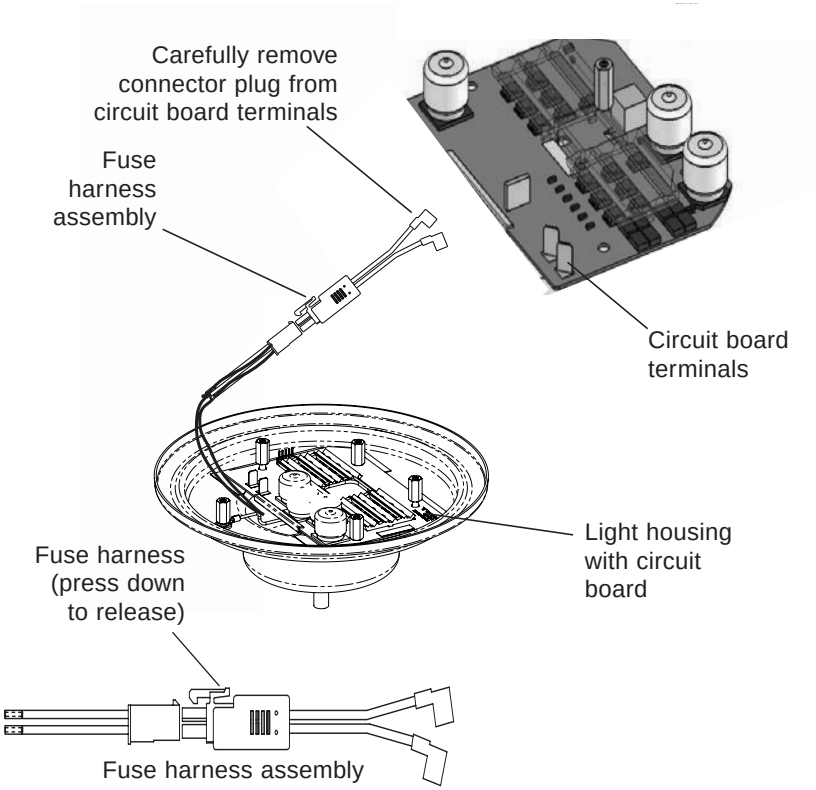

8. Using your fingers, carefully disconnect each fuse connector plug from the circuit board terminals. Carefully lift each connector plug upward, with small side-to-side movements while holding the circuit board terminals with a flat screw driver. Then gradually disconnect the connector plug from the terminal.

   Note: To avoid permanent damage to the circuit board, be sure not to pull the terminals off the surface of the circuit board.

9. Once the fuse connector plugs are removed from the circuit board terminals, separate the fuse assembly from the light wire harness by pressing down on the fuse release lever, then gently pull apart.

INSTALLING THE INTELLIBRITE® 5G POOL LIGHT AND FUSE HARNESS ASSEMBLY WITH NEW GASKET (see illustration on next page)

⚠WARNING Be sure to install ALL of the four (4) retaining nuts. These nuts ensure proper electrical ground. Failure to install all of the retaining nuts could create an electrical hazard which could result in death or serious injury to pool users, installers or others due to electrical shock.

1. Insert the new fuse harness connector into the light cable harness plug and snap together.
2. Using your fingers to carefully connect each fuse connector plug onto the circuit board terminals. *Be sure not to press down to hard on the connector, this can damage the terminal connections on the circuit board.*
3. **Install NEW GASKET ONTO LENS:** Stretch the gasket around the circumference of the lens. Be sure the gasket is installed evenly around the lens.

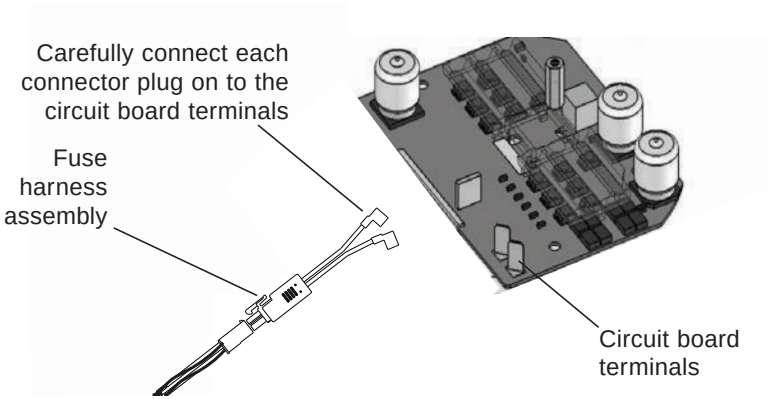

4. **ALIGN LENS/GASKET ONTO LIGHT HOUSING:**

   a) With the light housing resting on its base, place the lens/gasket on top of the light housing.

   b) Rotate the lens/gasket to align the letter “W” (“WIDE” angle) on the lens with the brass nut in the housing (see diagram on page 6 for brass nut location).

   Note: The IntelliBrite light lens ships from the factory in the ‘WIDE’ (W) angle position. The “wide” position of the lens is typically used for lights located either side of the pool. The “narrow” position of the lens is typically used for lights located either end of the pool. To use the “NARROW” angle light beam, rotate the lens/gasket to align the letter “N” on lens. Note: For more information about using the “WIDE” and NARROW angle lens, see page 8.

5. **INSTALL FACE RING:** Place the face ring on top of the lens/gasket/housing. Rotate the face ring so the ***pilot screw* hole** is aligned in the 12 o’clock position, with the lens letter “W” (or “N”) and the brass nut in the housing. Also, verify the “TOP” position arrow indicator label (see page 6) on the rear of the housing is aligned with the pilot screw on the face ring.

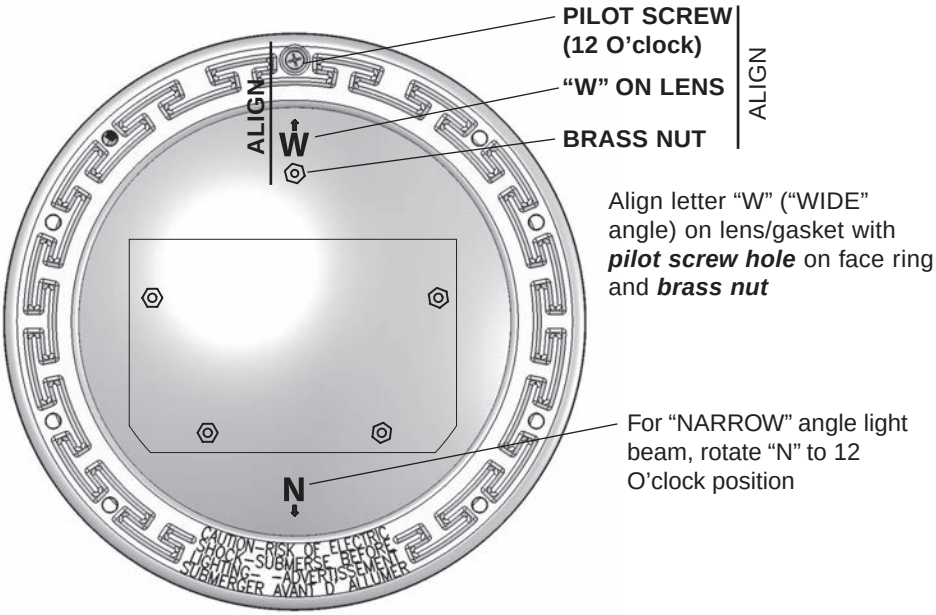

6. **INSTALL UNI-TENSION CLAMP:** With the hook ends of the circular uni-tension clamp pointing down, spread the clamp and place it in the "U" recesses of the locking levers. Be sure the hook ends of the clamp are located between the pair of locking levers as shown below and that the wire clamp is properly engaged with all of the lock levers.
7. Place a cloth on the ground to protect the lens. Turn the light over so the lens is resting on the cloth. Be sure the orientation of the wire clamp and the bolt connection is positioned at 45°.
8. Tighten the bolt and nut until the distance between the ends of the clamp equals ¼-inch or less. ***Continue on next page.***

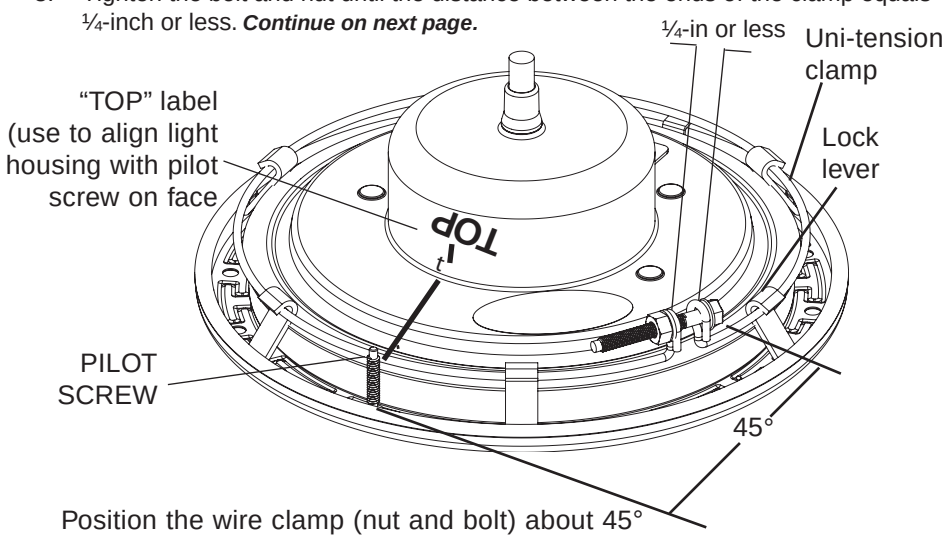

Position the wire clamp (nut and bolt) about 45° between the PILOT SCREW and BOLT/NUT.

9. Coil at least four (4) feet of cord around the light fixture (see Figure 1 on page 7). This allows the light to be serviced after the pool is filled with water.
10. Connect the three light wires (or two wires) to the corresponding light circuit wires in the Junction Box. For three wire connection: Connect the black wire to power, white wire to common, and the green wire to ground. Secure the Junction Box cover.
11. Install the IntelliBrite® light assembly into the pool niche. Be sure to insert the TAB on the lower part of the face ring into the niche SLOT (located on the lower part of the niche). This is important to secure the lower part of the light assembly onto the niche before tightening the pilot screw.
12. Carefully tighten the special bronze pilot screw to secure the upper part of the light assembly onto the niche.

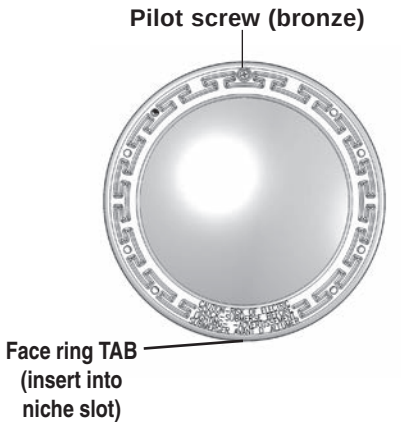

IntelliBrite® 5G Pool Light

13. **Final check for proper IntelliBrite Light operation:** Switch on the main switch or circuit breaker to the system and the switch that operates the IntelliBrite light itself. The light should illuminate when power is applied. If not recheck the installation steps starting with Step 1 (page 2).

Wide and Narrow Angle Lens Adjustment

Wide and Narrow Angle Lens Feature

The IntelliBrite® light lens geometry provides a choice of “wide” or “narrow” angle light beam to suit various size pools. For lights located on either side of the pool, rotate the lens to the ‘wide’ (W) angle position, which will provide a wider angle light beam for greater underwater coverage and light reflection the width of the pool. For lights located either end of the pool, rotate the lens to the ‘narrow’ (N) angle light beam position for increased underwater light intensity and distance. Note: The IntelliBrite light lens ships from the factory in the ‘WIDE’ (W) angle position.

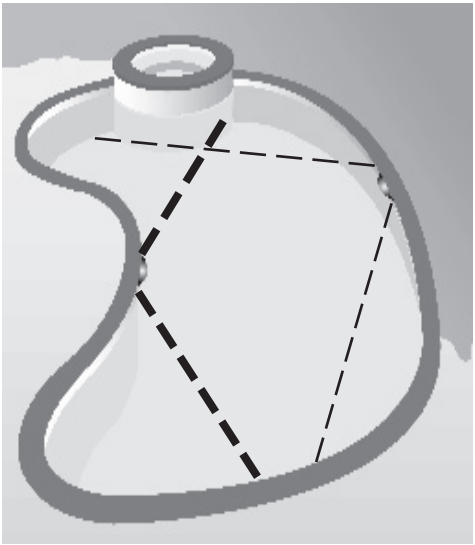

WIDE ANGLE LIGHT BEAM (FOR SIDES OF POOL)

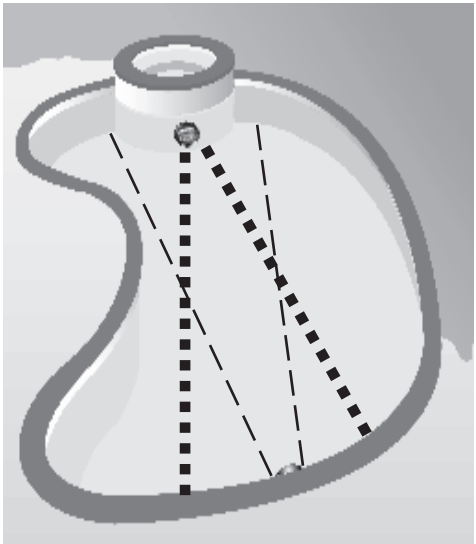

NARROW ANGLE LIGHT BEAM (FOR ENDS OF POOL)

IntelliBrite® Pool Light Assembly Replacement Kit Part Numbers

Note: A 120 VAC to 12 VAC external transformer is required for the 12 VAC model IntelliBrite pool white light. See page 1 for more information.

IntelliBrite 5G Pool Light Assembly (UL/CAS listing)

Product Model	Voltage	Cord Length (feet)
601105	12V	30’
601106	12V	50’
601107	12V	100’
601108	12V	150’
601205	12V	30’
601206	12V	50’
601207	12V	100’
601208	12V	150’

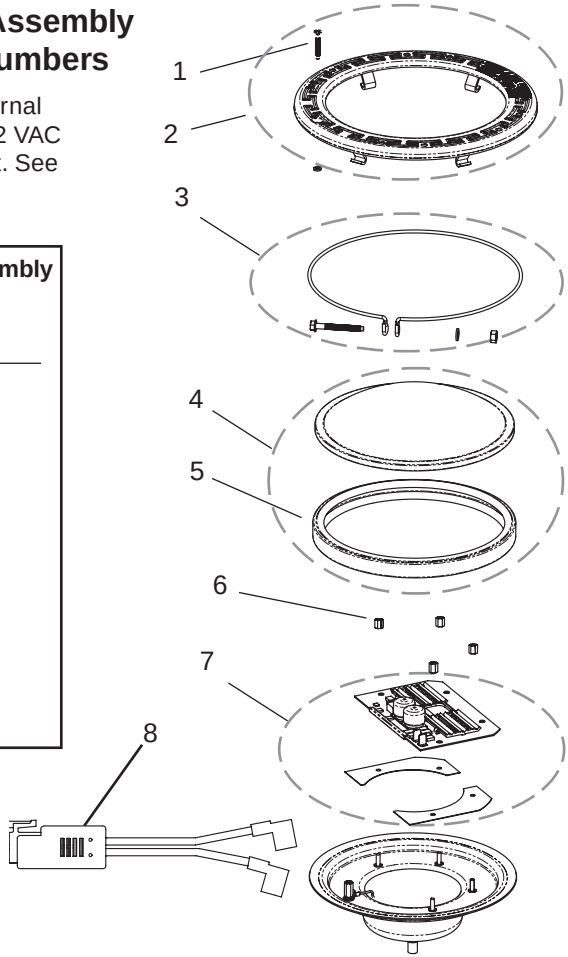

Item No.	Kit Part No.	Description
2, 3, 5	600095	Face Ring assembly, stainless steel. - Uni-tension wire clamp assembly. - Gasket, 8-3/8 in. diameter, silicon.
4, 5	619864Z	Replacement Lens Kit. - Gasket, 8-3/8 in. diameter, off white. - Lens, IntelliBrite, Pool, 8-3/8 in. diameter, tempered.
3, 5, 7	619875Z (300W), 619916 Z (400W), 619917Z (500W) - 619818Z (color)	Replacement kit includes: Circuit Board, Thermal Strips (2x). - Uni-tension wire clamp assembly. - Gasket, 8-3/8 in. diameter, off white.
1	79104800	Pilot screw, with captive gum washer.
5	79101601	Gasket, 8-3/8 in. diameter, silicone.
8	620276	Fuse Harness Kit

Note: The 120 VAC IntelliBrite pool light has an integrated 12 VAC transformer.

Notes

1620 HAWKINS AVE., SANFORD, NC 27330 • (919) 566-8000
10951 WEST LOS ANGELES AVE., MOORPARK, CA 93021 • (805) 553-5000

WWW.PENTAIRPOOL.COM

All Pentair trademarks and logos are owned by one of its global affiliates. IntellliBrite® ia a trademarks and/or registered trademarks of Pentair Water Pool and Spa, Inc. and/or its affiliated companies in the United States and/ or other countries. Unless expressly noted, names and brands of third parties that may be used in this document are not used to indicate an affiliation or endorsement between the owners of these names and brands and Pentair Water Pool and Spa, Inc. Those names and brands may be the trademarks or registered trademarks of those third parties. Because we are continuously improving our products and services, Pentair reserves the right to change specifications without prior notice. Pentair is an equal opportunity employer.

© 2015 Pentair Aquatic Systems. All rights reserved.
This document is subject to change without notice.

Technical Support: (800) 831.7133

P/N 620239 REV A 4/2015